DIGITAL LOGIC FUNDAMENTALS

Course Code	:30801220
Credit Hours	:3
Prerequisite	: 30801101

Course description {Numbering systems, Boolean algebra, logic algebra, basic logic gates, minimization of logic functions, combinational logic: adders, subtractors, encoders and decoders, multiplexers and demultiplexers, sequential logic: flip-flops, counters, registers and clocked sequential circuits.
}

Course Title; Digital Logic Fundamentals
Credit Hour(3)

[Pre-req. 30801101**]**

Textbook: Textbook Title

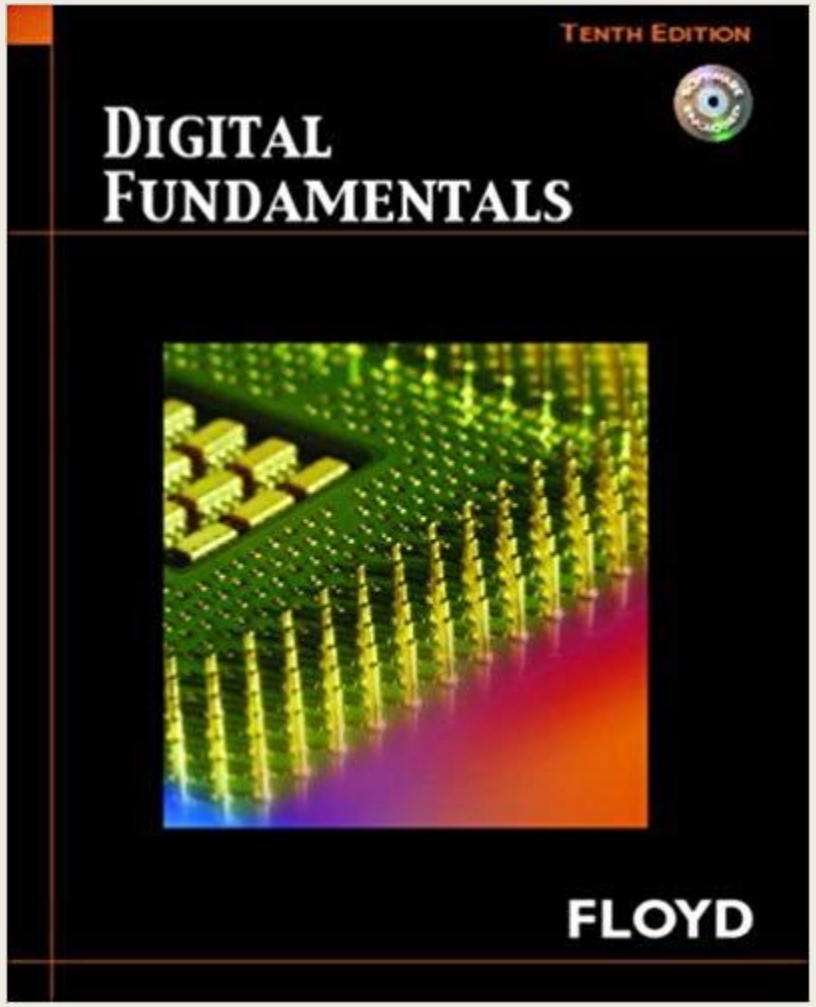

COURSE OBJECTIVES

The course consists of a set of experiments designed to allow students to build, and verify digital circuits and systems. This set of experiments cover relevant topics designed to reinforce the theoretical concepts taught in the classroom with practical experience in the lab. By the end of the course, students are expected to have a good understanding of digital logic design.

COURSE SYLLABUS

Week	Course Topic
Week 1	
Week 2	Chapter 2, Logic forms conversions
Week 3	
Week 4	
Week 5	
Week 6	
Week 7	
Week 8	Midterm Exam
Week 9	
Week 10	
Week 11	
Week 12	
Week 13	
Week 14	
Week 15	
Week 16	Final Exam

Chapter 2

Logic Forms Conversions

CONSTRUCTING A TRUTH TABLE

Decimal to Binary

- Converting from decimal to binary

1 2 4 8 16 32 64 128 ....

2-variables Truth Table

- Rule: n variables
- Number of rows in the result table = 2^n rows
- 2^2 → 4 rows
- Row numbers: 0 1 2 3
- Row values: convert the row number into binary

2 1	A	B
0	0	0
1	0	1
2	1	0
3	1	1

3-variables truth table

- 2^3 → 8 rows
- Row numbers: 0 1 2 3 4 5 6 7

4 2 1	A	B	C
0	0	0	0
1	0	0	1
2	0	1	0
3	0	1	1
4	1	0	0
5	1	0	1
6	1	1	0
7	1	1	1

Exercise

Construct a truth table for 4-variables function

Solution

Number of Rows = 2 ^ 4 = 16 rows
Row numbers from 0 – 15

8 4 2 1	A	B	C	D
0	0	0	0	0
1	0	0	0	1
2	0	0	1	0
3	0	0	1	1
4	0	1	0	0
5	0	1	0	1
6	0	1	1	0
7	0	1	1	1
8	1	0	0	0
9	1	0	0	1
10	1	0	1	0
11	1	0	1	1
12	1	1	0	0
13	1	1	0	1
14	1	1	1	0
15	1	1	1	1

TIMING DIAGRAMS

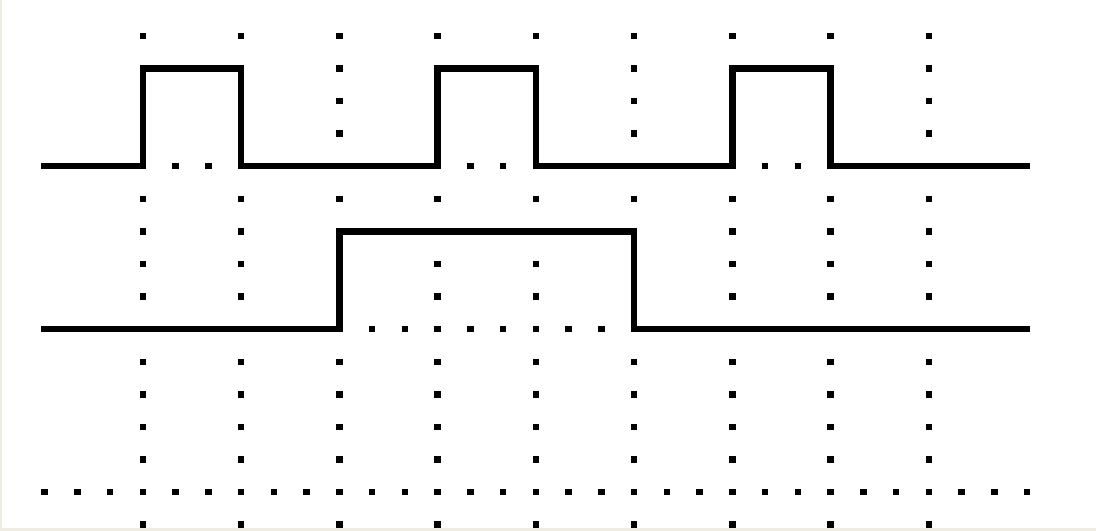

Obtain the Truth Table for F from the following Timing Diagram

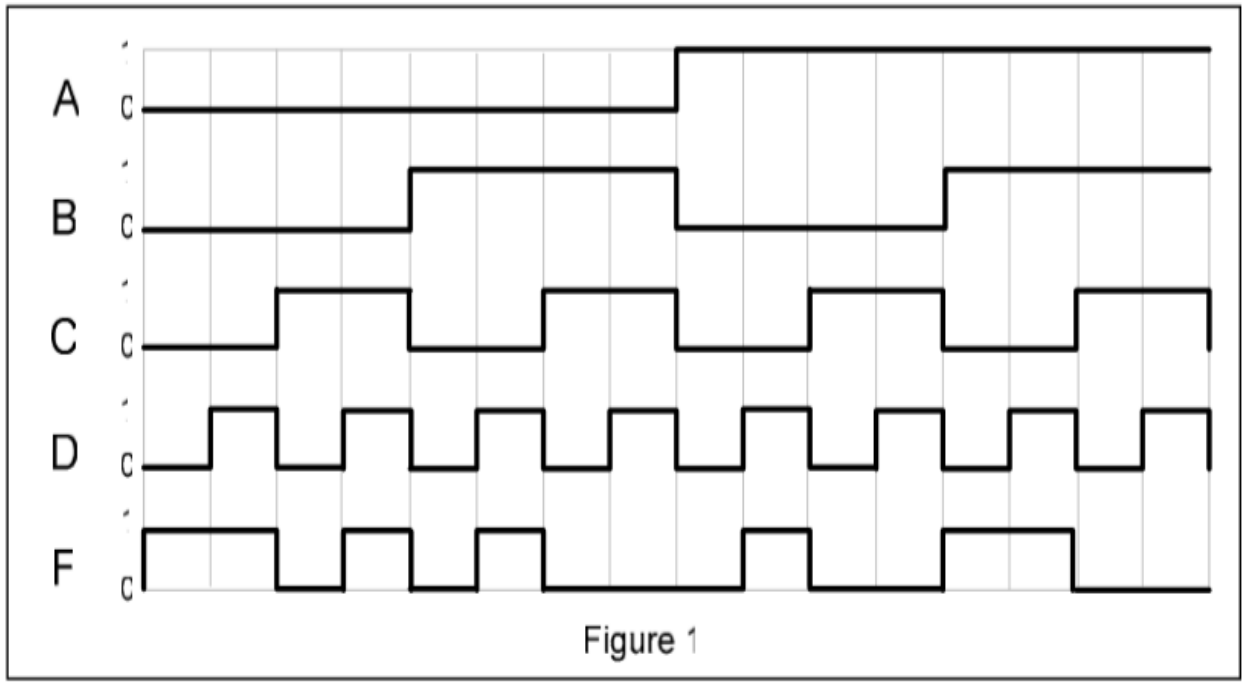

Timing Diagram

Truth Table

A	B	C	D	F
0	0	0	0	1
0	0	0	1	1
0	0	1	0	0
0	0	1	1	1
0	1	0	0	0
0	1	0	1	1
0	1	1	0	0
0	1	1	1	0
1	0	0	0	0
1	0	0	1	1
1	0	1	0	0
1	0	1	1	0
1	1	0	0	1
1	1	0	1	1
1	1	1	0	0
1	1	1	1	0

Exercise

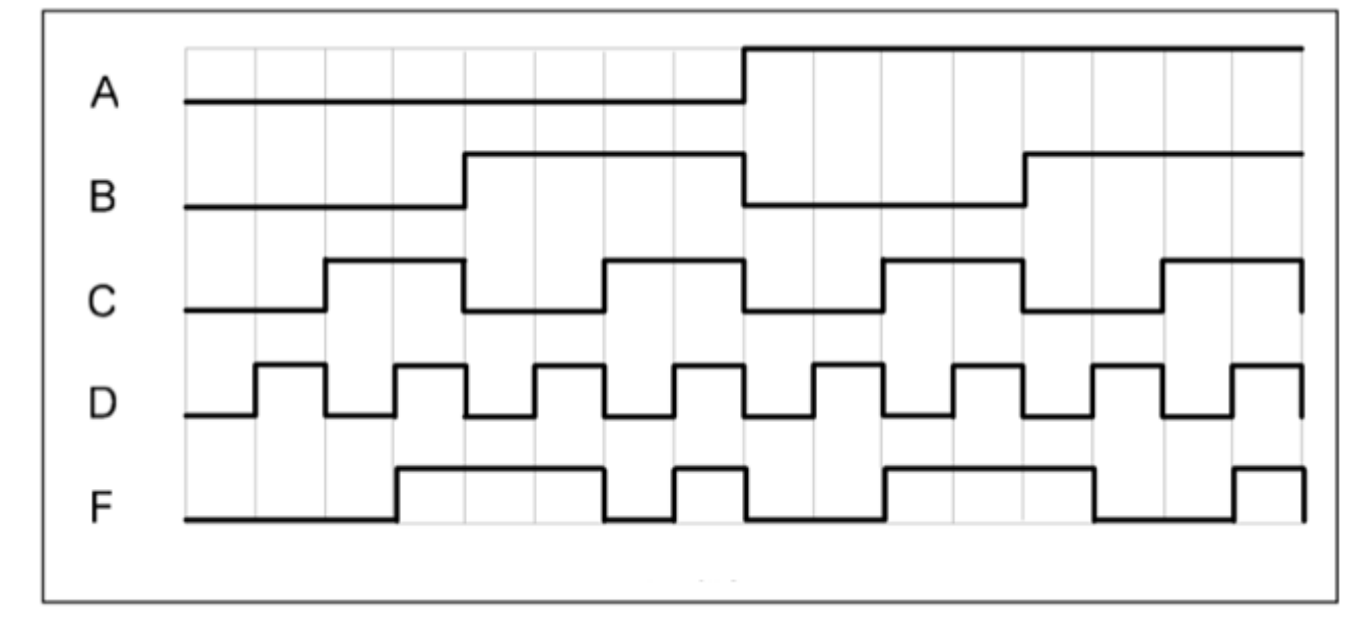

Obtain the truth table for F from the above timing diagram

Solution

A	B	C	D	F

LOGIC FORMS CONVERSION

$$Y = \left(\overline{AB}\right)B\overline{C}$$

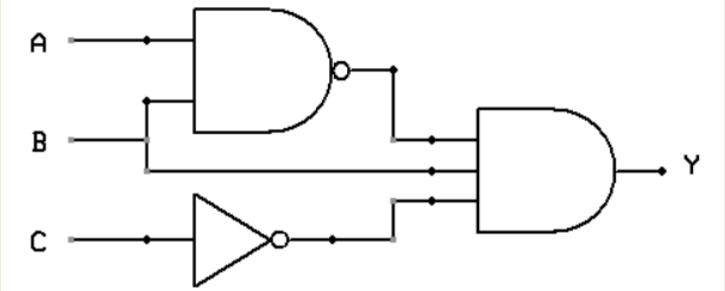

AB \ CD	00	01	11	10
00	1	0	1	1
01	0	1	1	1
11	0	0	1	1
10	1	0	1	1

Inputs		Output
A	B	L
0	0	0
0	1	1
1	0	1
1	1	0

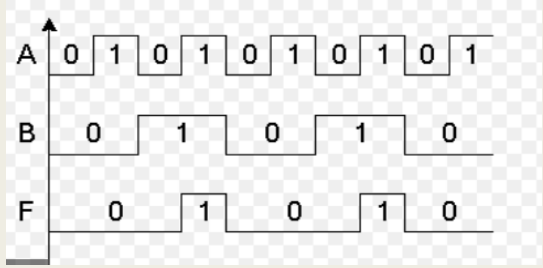

Boolean Algebra

- A Boolean function has:
  - At least one Boolean variable,
  - At least one Boolean operator, and
  - At least one input from the set {0,1}.
- It produces an output that is also a member of the set {0,1}.

Now you know why the binary numbering system is so handy in digital systems.

Boolean Algebra

- As with common arithmetic, Boolean operations have rules of precedence.
- The NOT operator has highest priority, followed by AND, then OR.

Convert Boolean expression into digital circuit diagram

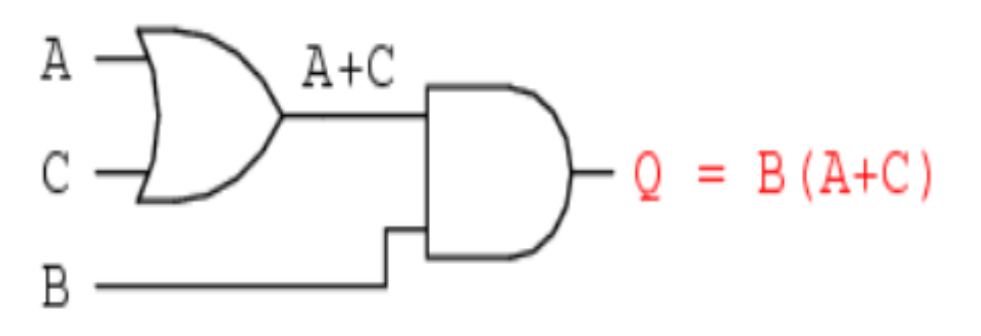

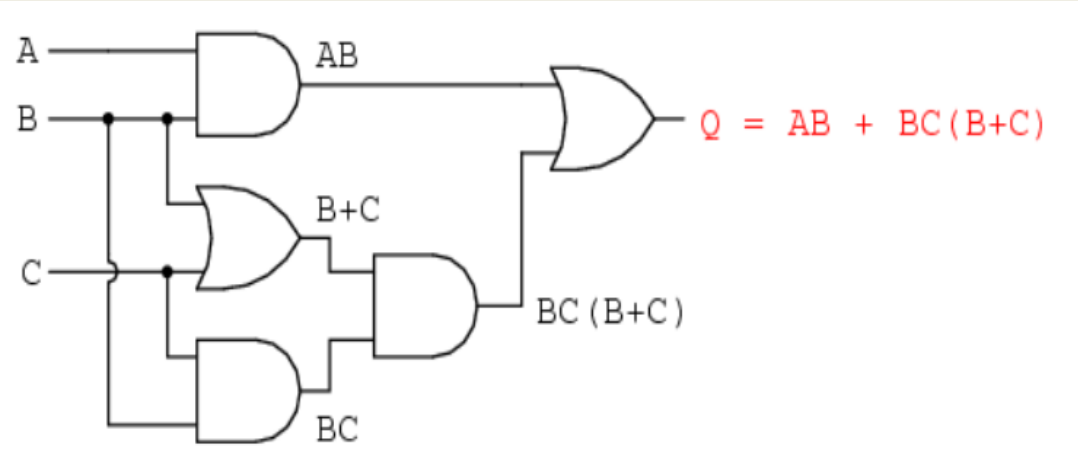

Exercises

- Convert the following logic gates into Boolean expressions

1

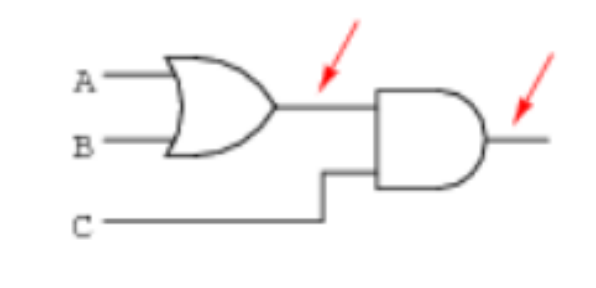

2

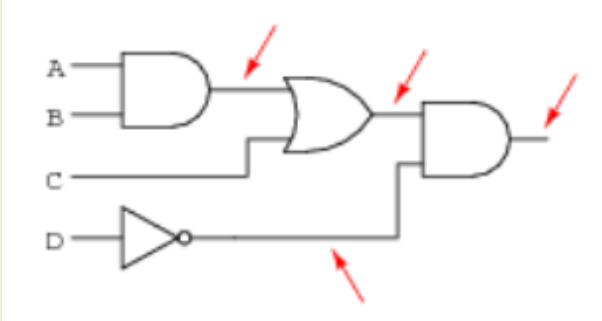

3

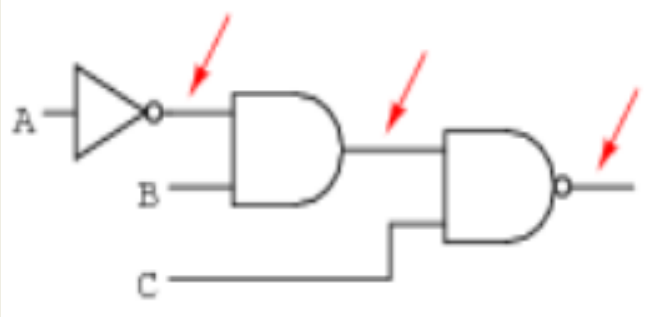

Solution

1. (A+B) C

2. $(AB + C)\,\overline{D}$

3. $\overline{(\overline{A}\,B)C)}$

BOOLEAN EXPRESSION TO LOGIC CIRCUIT CONVERSION

$$F = x + y'z$$

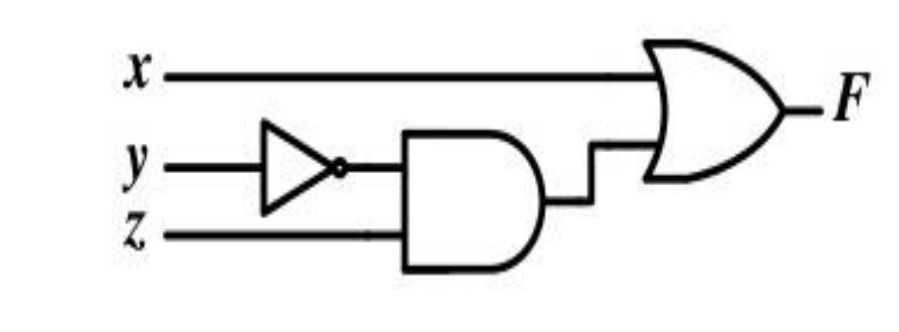

Digital circuit into Boolean expressions

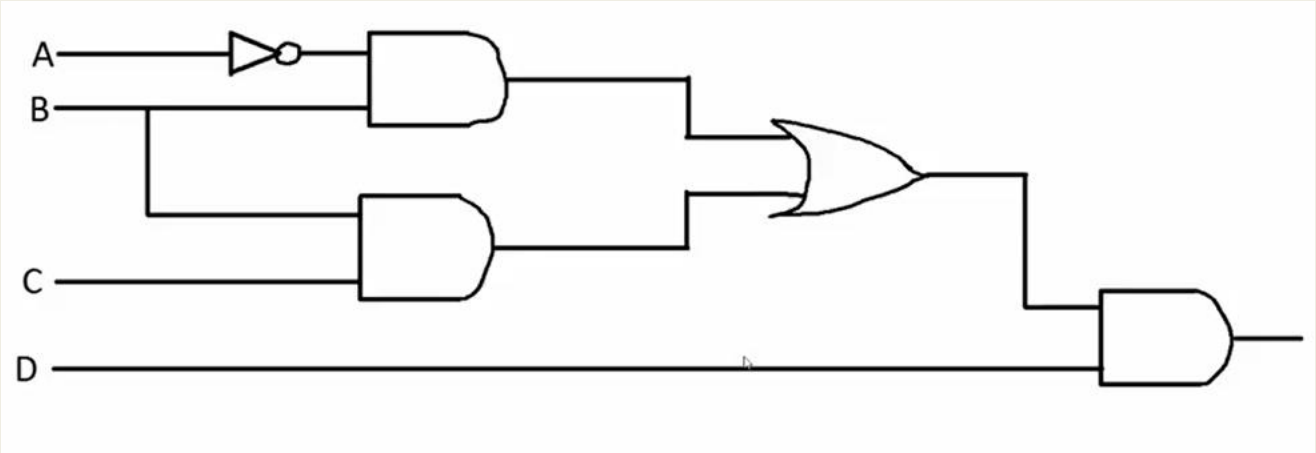

Solution tracing

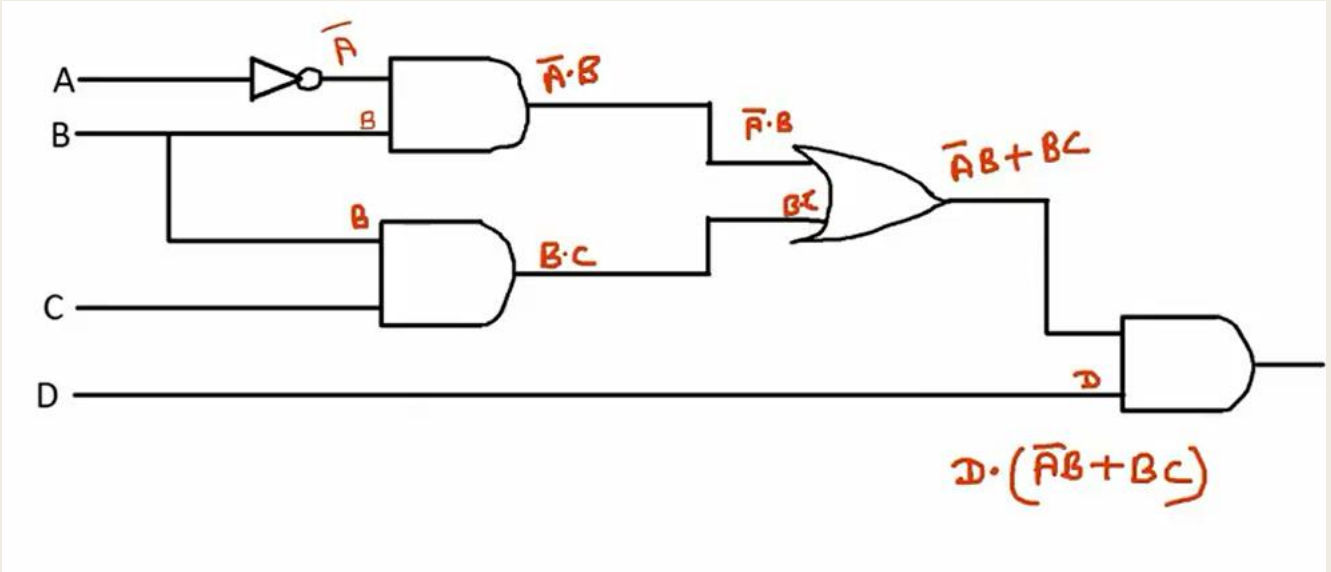

Examples

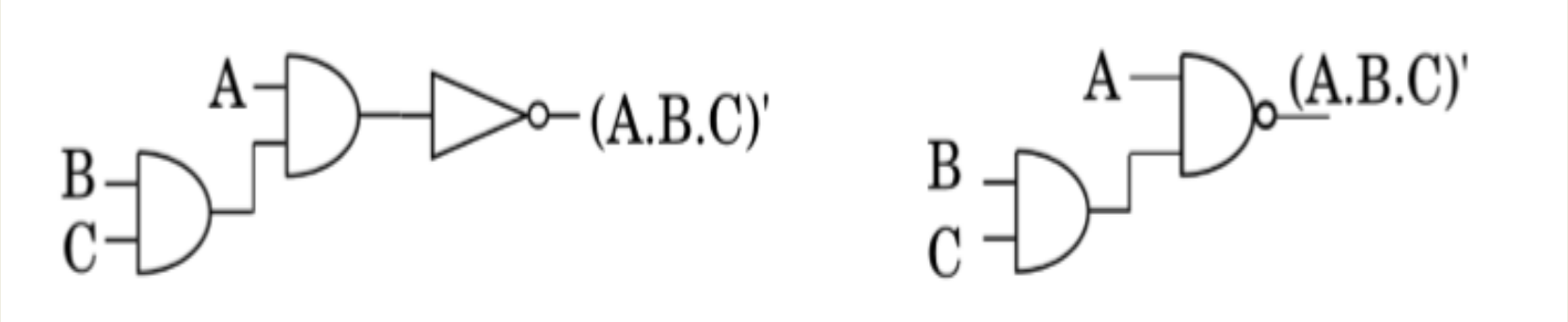

Convert the following circuit into Boolean expression

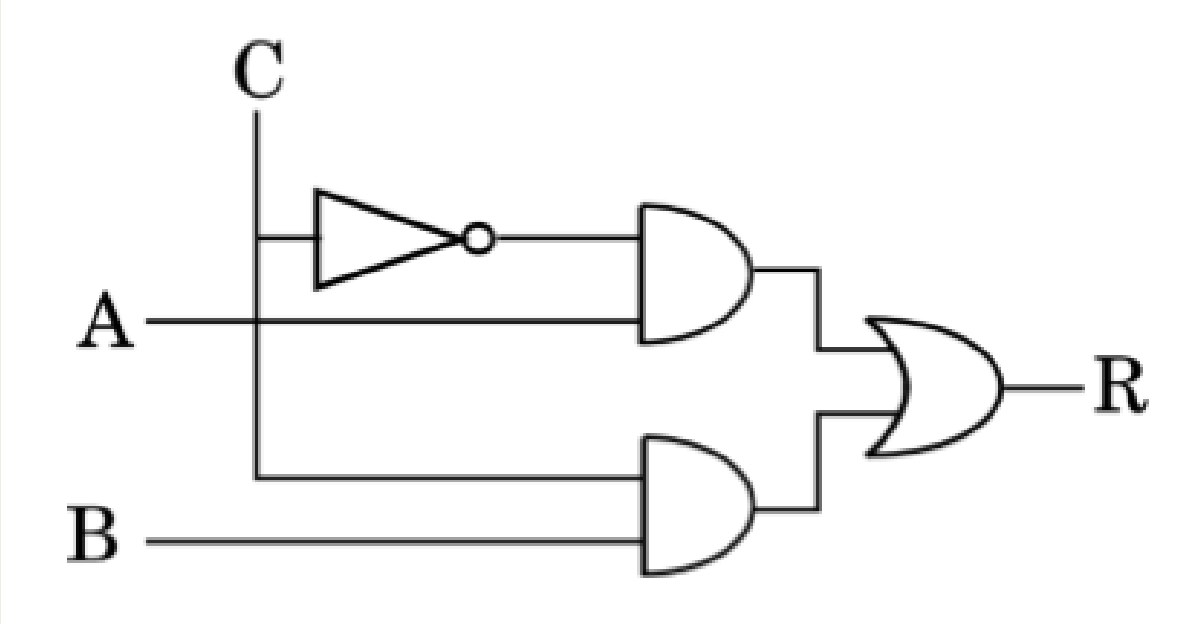

$$\overline{C}\,A + C\,B$$

F = (A B’ + BC) D’

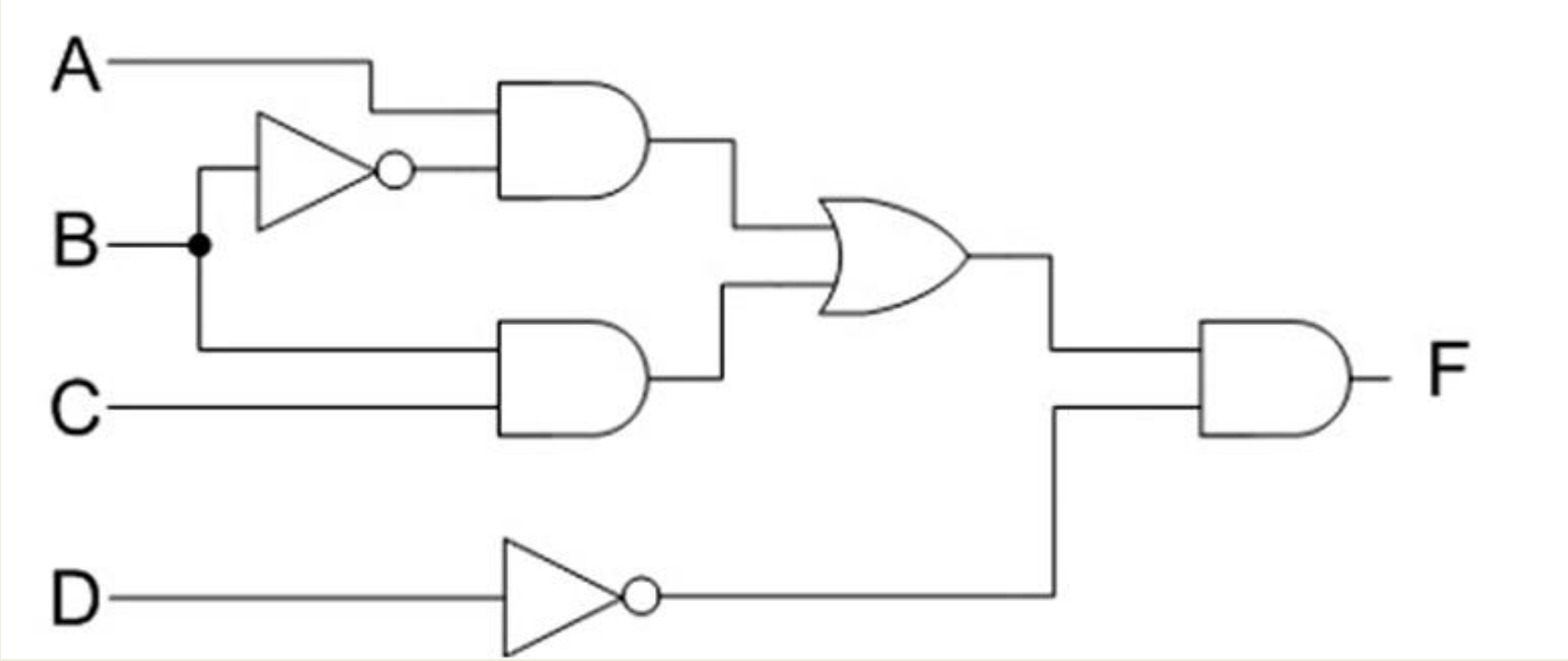

Boolean expressions into digital circuit

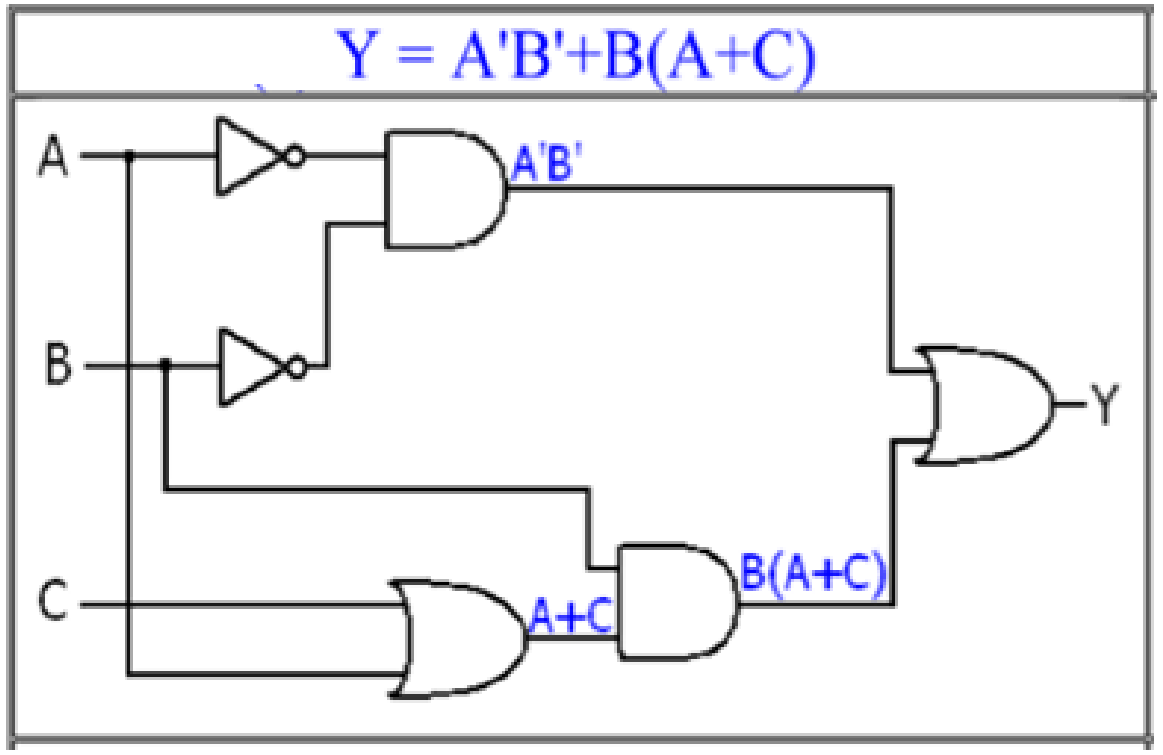

Boolean expressions into digital circuit

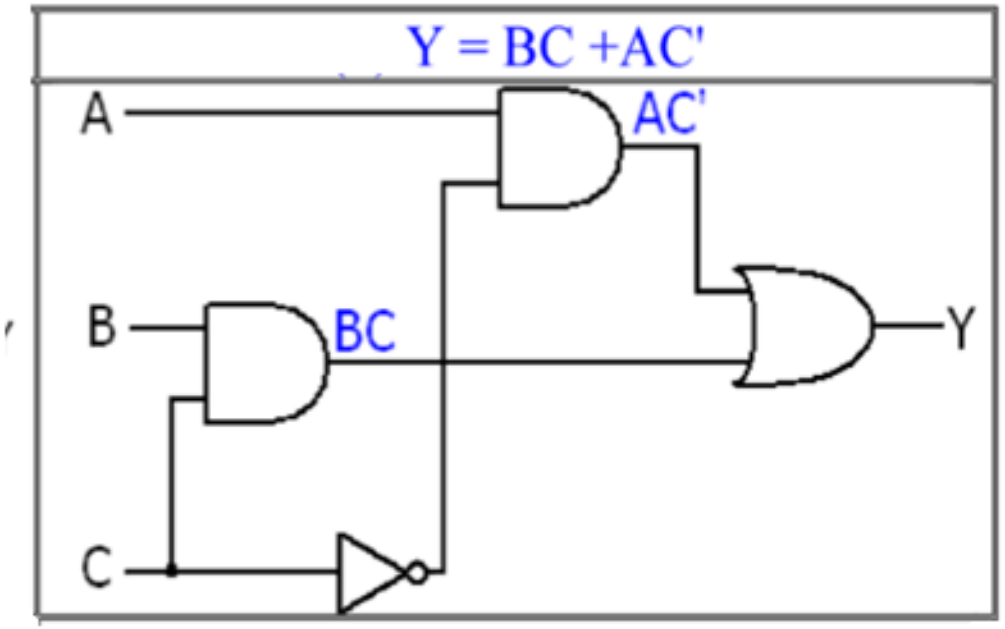

Boolean expressions into digital circuit

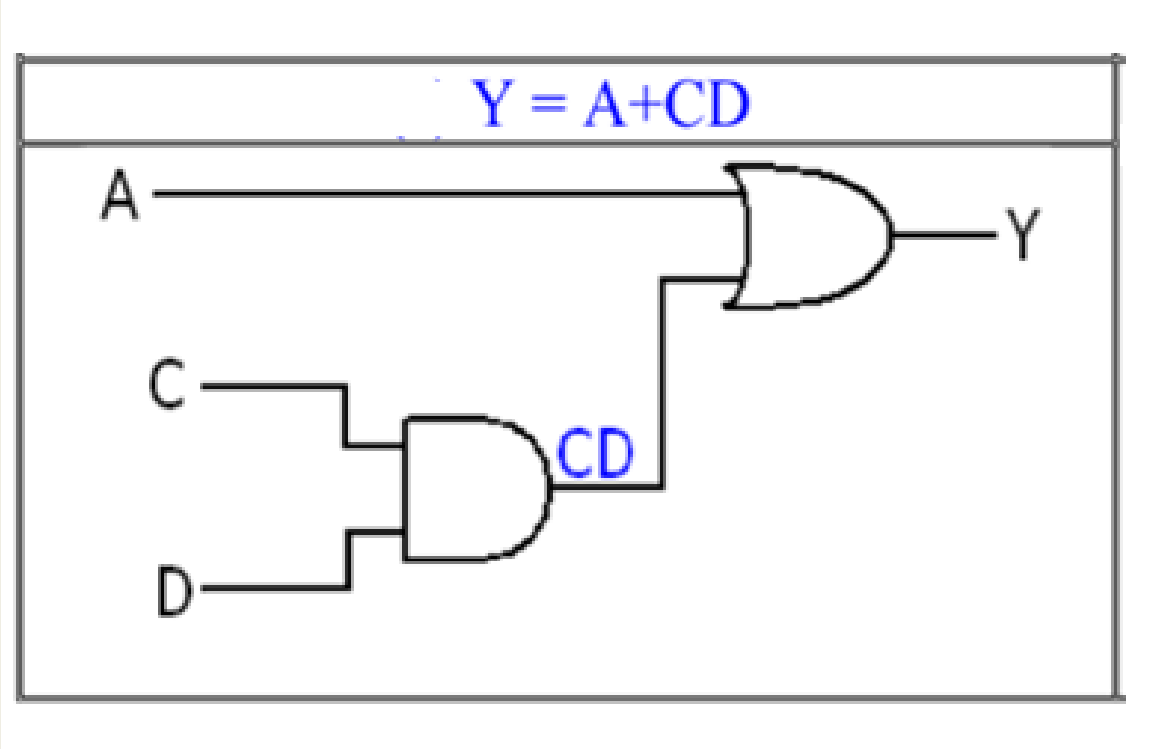

Boolean expressions into digital circuit

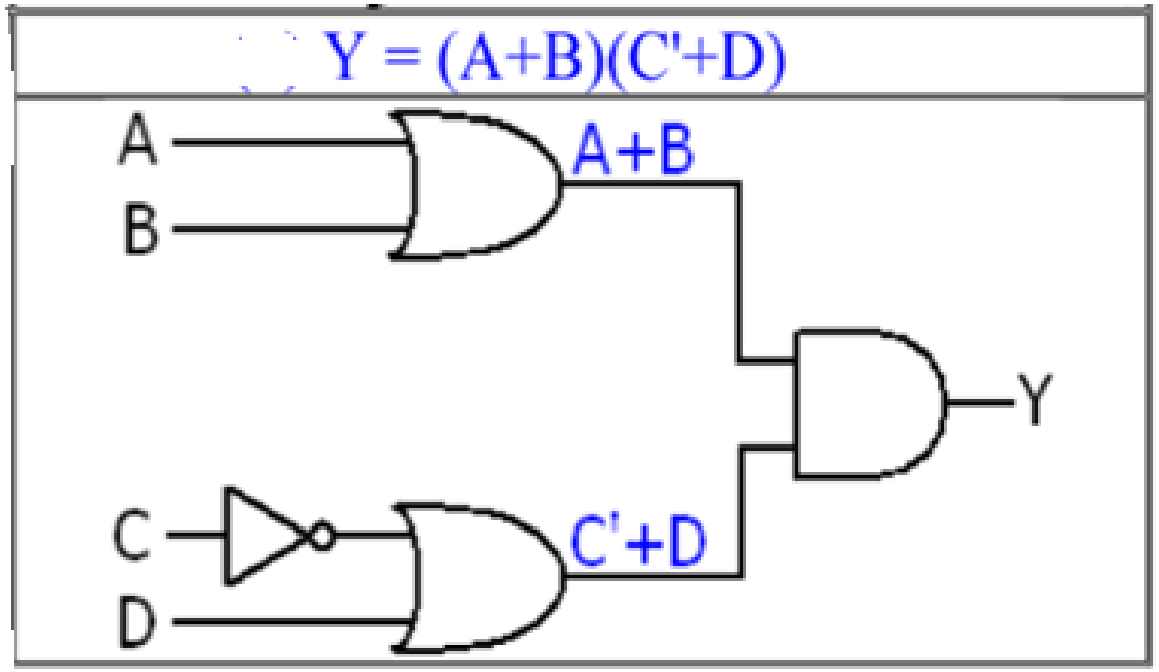

Boolean expressions into digital circuit

$$[(\overline{A} + \overline{B}) \bullet \overline{C}]$$

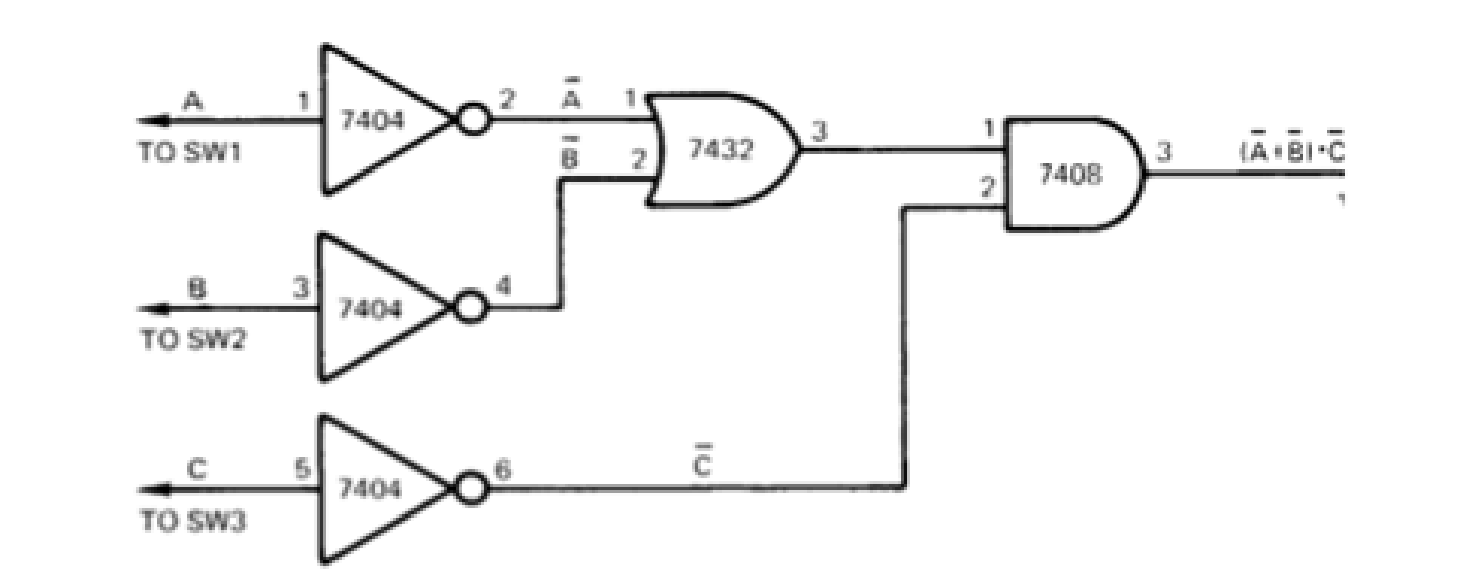

Boolean expressions into digital circuit

$$\overline{[(A \bullet B) + C]}$$

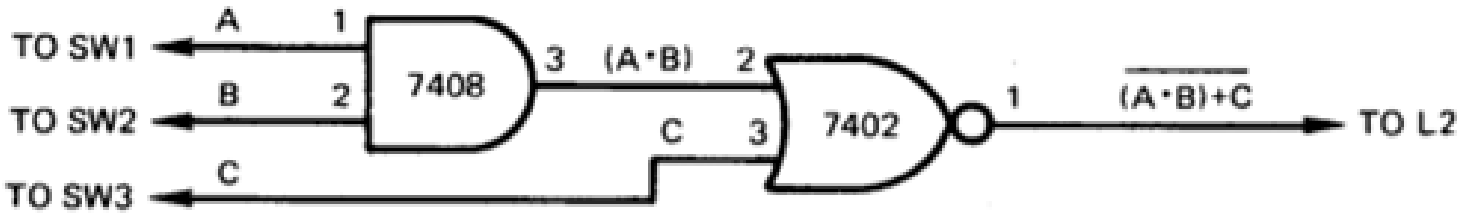

Find out the Function

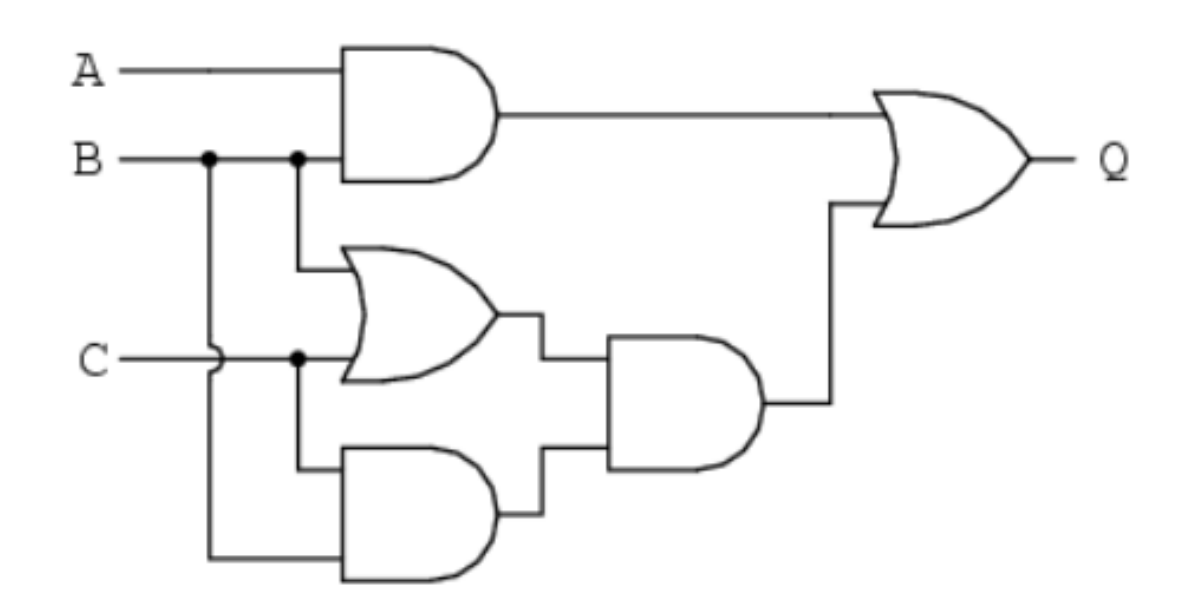

Solution

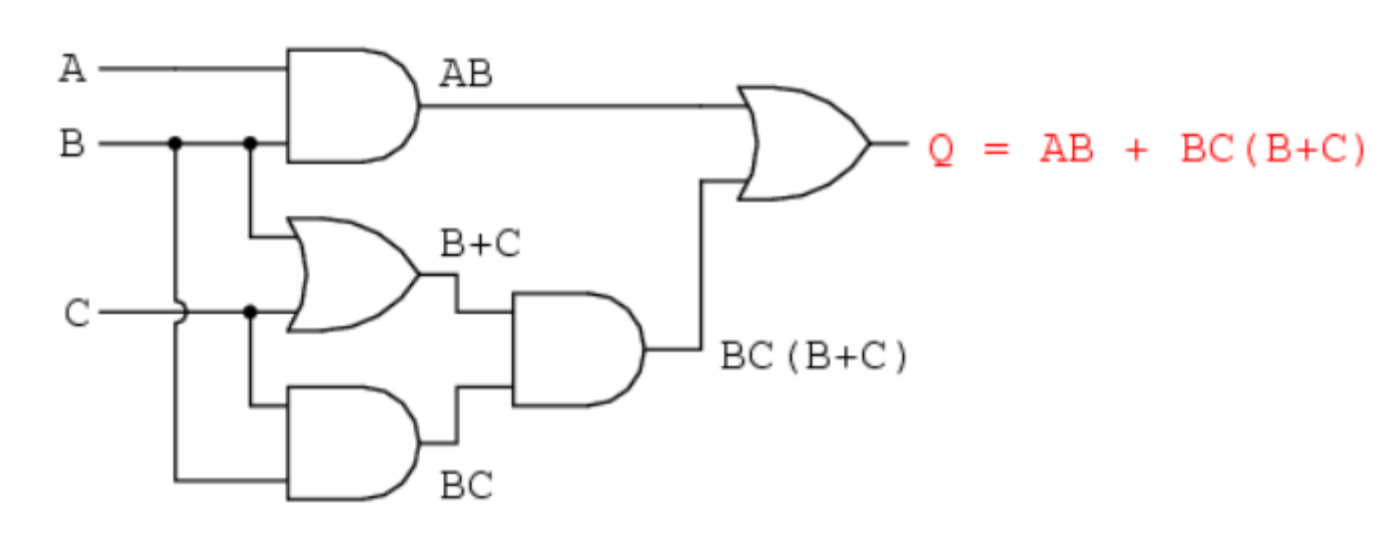

Draw the circuit of the following function

$$\left\{\overline{\left(\overline{\overline{A}+\overline{B}}\right)+\left(\overline{A+\overline{B}}\right)}\right\}$$

Solution

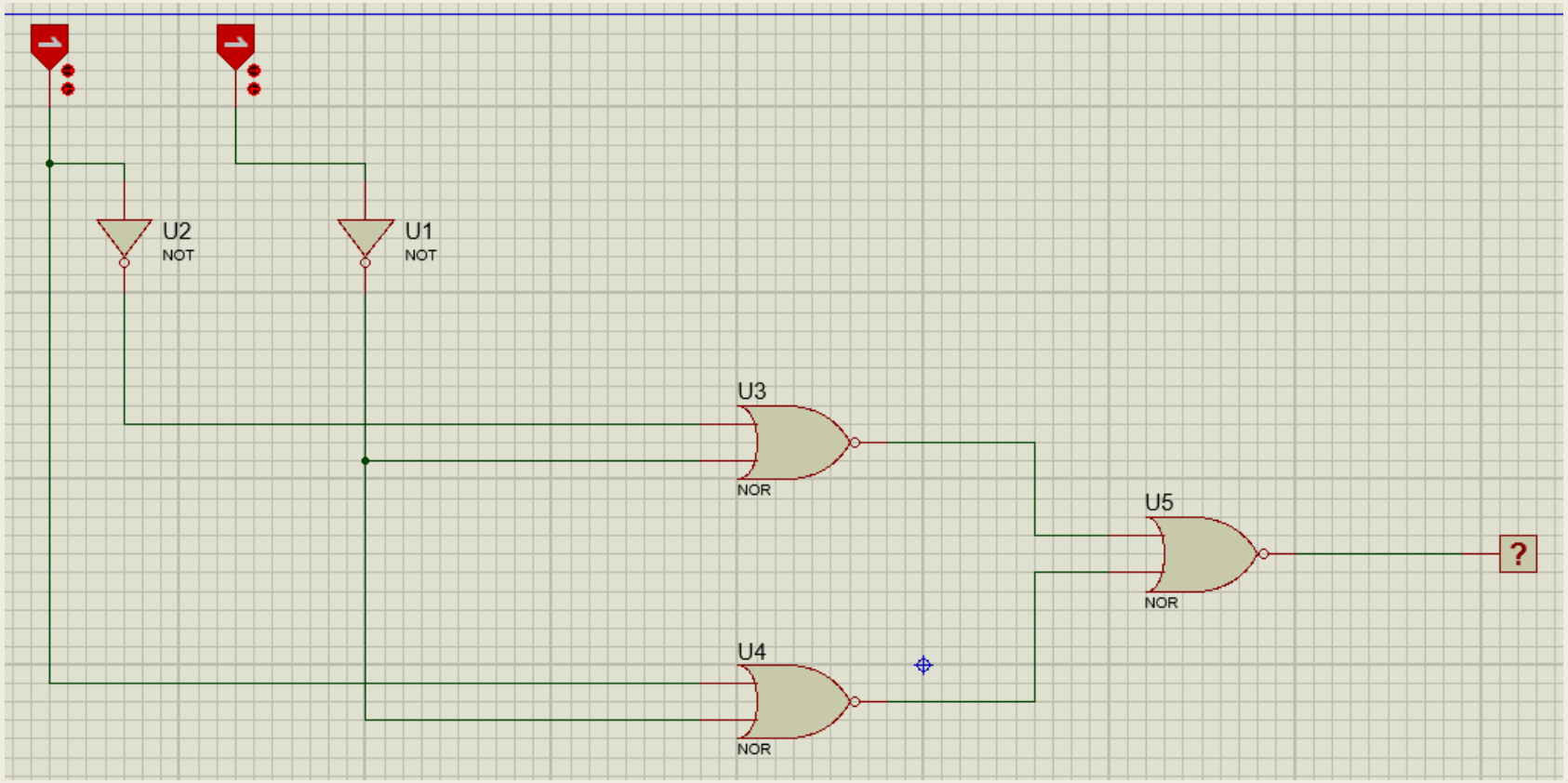

Truth Table

A	B	OUT
0	0	1
0	1	0
1	0	1
1	1	0

Draw the circuit of the following function

$$AB + B\overline{C} + AD$$

Solution

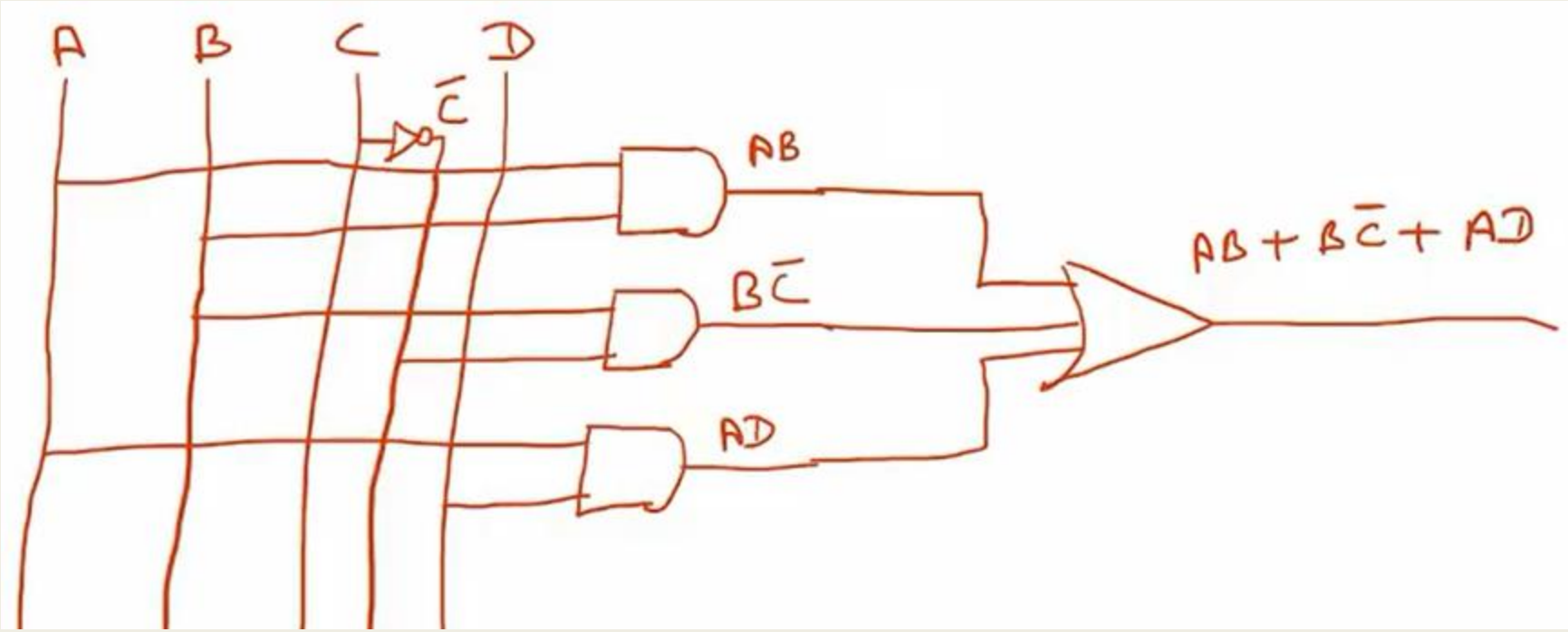

Solution

- There are numerous ways of stating the same Boolean expression.
  - These “synonymous” forms are *logically equivalent.*
  - Logically equivalent expressions have identical truth tables.

  - To show this do the following homework

Logically equivalent expressions

Create a digital circuit for the following boolean expressions and compare their truth tables.
You have to discover that b & c are equivalent in their truth tables output because c is a simplified version of b

a) $out = \bar{A}BC + ABC$

b) $x = ((A.\bar{B}.C)+B).B.\overline{(A+\bar{C})}$

c) $y = B.\bar{A}.C$

Paper homework

Equation B equivalent to Equation C

$$\overline{\overline{\overline{\overline{((A\overline{B}C)+B)}}}} \cdot B\overline{(A+\overline{C})}$$

$$\overline{((A\overline{B}C)+B)} \cdot B\overline{(A+\overline{C})}$$

$$((\overline{A}+\overline{\overline{B}}+\overline{C})+B) \cdot B(\overline{A} \cdot \overline{\overline{C}})$$

$$(\overline{A}+B+\overline{C}+B) \cdot B\overline{A}C$$

$$((\overline{A} + B + \overline{C})\ \overline{A}BC$$

$$\cancel{\overline{A}\overline{A}}BC + \overline{A}BBC + \cancel{\overline{A}B\overline{C}}C$$

zero

$$\overline{A}BC + \overline{A}BC = \overline{A}BC$$